Rhythmlink

English

MR Conditional/CT Disposable Deep EEG Cup Electrodes

Intended Applications

The MR Conditional Disposable EEG Cup Electrode is intended for use in the recording of the Electroencephalography [EEG], Evoked Potentials [EP] or as a Ground or Reference in an EEG or EP recording. This device is provided non-sterile for Single Patient Use Only and may remain on the patient in a MR environment under specific conditions.

Caution

Federal [USA] law restricts this device to sale by or on the order of a physician and it should only be used in compliance with accepted industry standards. Rhythmlink International, LLC is not responsible for injury, infection or other damage resulting from the use or misuse of this product.

MR Conditional/CT Disposable Deep EEG Cup Electrodes are for professional use only and should only be used in compliance with accepted industry standards. **The included extension cables [Fig. 1] are MR Unsafe.** Remove all extension cables before entering a MR environment.

Instructions for Use

Clean application site. Apply Cup Electrode using Weaver Ten20 conductive paste. MR Conditional/CT Disposable Deep EEG Cup Electrodes are only approved for use with Weaver Ten20 conductive paste. Collodion may be used if desired. Remove all extension cables before entering an MR environment. When finished, remove electrodes and clean application sites.

Rhythmlink International, LLC
1140 First Street South
Columbia, SC, USA 29209-3540
+1.866.633.3754 [toll-free]
+1.803.252.1222
+1.803.252.1111 [fax]
sales@rhythmlink.com
Rhythmlink.com

Rx Only NON STERILE

To view a list of symbol definitions found on packaging and instructions for use, please visit Rhythmlink.com/symbols.

L190001 rev010

MRI Safety Information MR

Non-clinical testing has demonstrated that the MR Conditional/CT Disposable Deep EEG Cup Electrode [Fig. 2] is MR Conditional in configurations of 2 to 48 electrodes. These electrodes can safely remain on a patient during a MR scan for 15 minutes under the following conditions:

- Static magnetic field of 1.5 or 3.0 Tesla
  Maximum spatial gradient field of 4,000 gauss/cm [40T/m] or less
- Maximum whole-body averaged specific absorption rate of 2 W/kg in the Normal Operating Mode
- **Remove extension cables [Fig. 1] before entering an MR environment. They are MR Unsafe.**

Under the scan conditions defined above, the MR Conditional/CT Disposable Deep EEG Cup Electrode is expected to produce a maximum temperature rise of less than 2ºC after 15 minutes of continuous scanning.

In non-clinical testing, the image artifact caused by the Cup Electrode extends less than 4 mm from the Cup Electrode when imaged with a gradient echo pulse sequence and a 3 T MRI system.

RF Induced Heating Information

1.5 Tesla Systems: In non-clinical testing with a 1.5 Tesla Intera, Philips Medical Systems MR system (Software: Release 12.6.1.4 2012-05-22) the MR Conditional/CT Deep Cup Electrode produced a temperature rise of ≈ 0.7ºC in a static phantom with a background temperature increase of ≈ 0.1ºC at a software-displayed head averaged (HA) specific absorption rate (SAR) of "<3.9" W/kg (≈ 2.1 W/kg in a phantom calorimetric test) for 15 min. of continuous MR scanning with transmit/receive body coil. The local SAR shall be < 0.9 W/kg for using the MR body coil.

3.0 Tesla Systems: In non-clinical testing with a 3 Tesla Magnetom Trio, Siemens Medical Solutions MR system (Software: Numaris/4 syngo MR B17) the MR Conditional/CT Deep Cup Electrode produced a temperature rise of ≈ 1.5ºC in a static phantom with a background temperature increase of ≈ 0.4ºC at a software-displayed head averaged (HA) specific absorption rate (SAR) of "3.5" W/kg (≈ 3.2 W/kg in a phantom calorimetric test) for 15 min. of continuous MR scanning with transmit/receive body coil. The local SAR shall be < 1.3 W/kg for using the MR body coil.

The MR Conditional/CT Disposable Deep EEG Cup Electrode, dual and multiple configuration [2 to 48 electrodes] have not been tested in simultaneous combination with other devices.

Artifact Information

MR image quality may be compromised if the area of interest is in the same area or relatively close to the position of the device. Therefore, it may be necessary to optimize MR imaging parameters for the presence of this device.

MR image artifacts can affect the device surrounding on each side from the device surface as follows:

Worst-case artifacts of	Spin Echo	Gradient Echo
Test object length	1.78 mm	2.99 mm
Test object diameter	1.77 mm	3.55 mm

The included extension cables are MR Unsafe. Remove all extension cables before entering an MR environment.

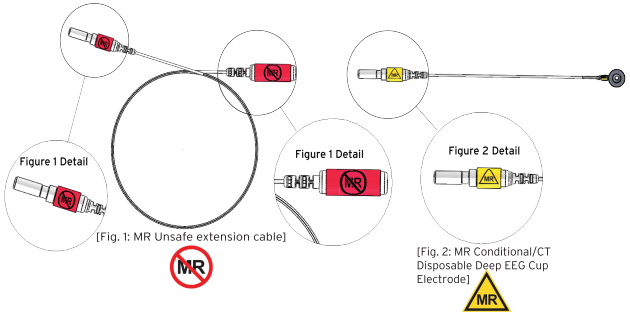

Avoid prolonged or repeated exposure to substances containing acetone or ethyl acetate. These solvents can damage the electrode and may lead to premature product failure.